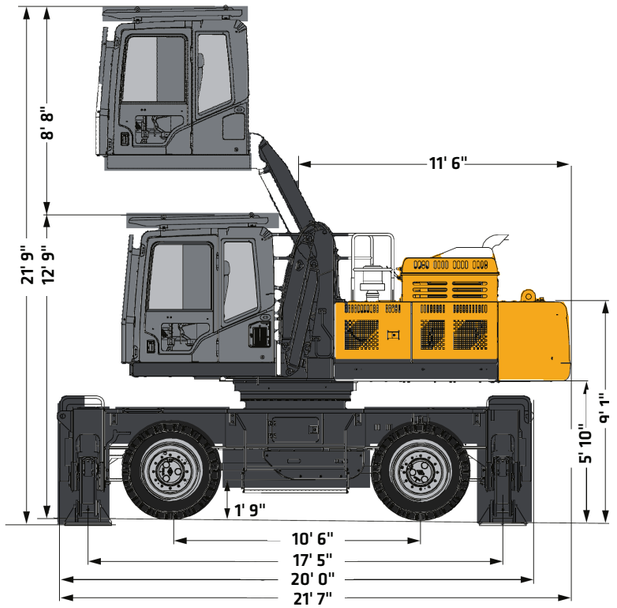

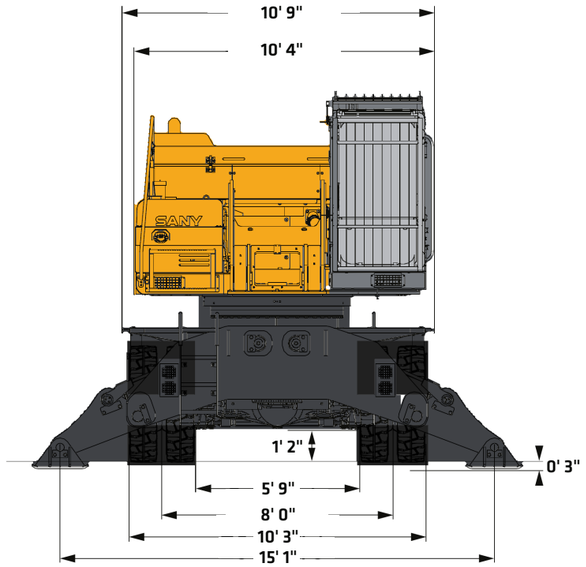

DIMENSIONS

Overall Length (Excluding Boom and Gripper)	21' 7"
Overall Width (Excluding Boom and Gripper)	10' 9"
Overall Height (Excluding Boom and Gripper) (Cab Lowered)	12' 9"
Cabin Elevation Height	8' 8"
Outrigger Transverse Span (Operating)	15' 1"
Outrigger longitudinal span (Operating)	17' 5"
Tail Swing Radius	11' 6"
Wheel Width	10' 3"
Wheelbase	10' 6"
Boom Length (Standard)	34' 5"
Stick Length-Option 1	24' 7"
Stick Length-Option 2	31' 2"

In the interest of continual equipment development, SANY America Inc. reserves the right to change these specifications at any time without prior notification.
©2026 SANY America Inc. HEXPS26SMHW48G5001

INDUSTRY'S STRONGEST STANDARD WARRANTY | 3-YEAR* 6,000 HOURS

*Warranty applies to 2026 Material Handler Models

SANY America Inc. 318 SANY Way
Peachtree City, Georgia 30269
470.552.SANY sanyamerica.com

SMHW48G5

SANY

MATERIAL HANDLER

102,515 LBS OPERATING WEIGHT
338 HP NET HORSEPOWER
58' 5" MAX OPERATING REACH

TECHNICAL SPECIFICATIONS

MACHINE DATA	
Engine	Cummins QSL9 252kW
Engine Emission	Stage V
Engine Rated Power	338 hp / 1,800 rpm
Engine Rated Torque	1,126 lb-ft / 1,400 rpm
Operating Weight (Excluding Grip)	102,515 lbs
Max. Operating Radius (Without Gripper)	58' 5"
Max. Operating Depth (Without Gripper)	17' 7"
Max. Operating Height (Excluding Gripper)	64' 0"
Max. Rotating Speed	8 rpm
Max. Gradeability	35%
Max. Traveling Speed	12 mph
Min. Turning Radius	28' 11"
Hydraulic System Relief Pressure	4,641 psi
Hydraulic System Total Displacement	0.056 gal + 0.056 gal
System Voltage	24 v
Load Capacity (Maximum Range)	9,480 lbs @ 54' 2"
Load Capacity (Usual Range)	18,960 lbs @ 34' 5"
Drive Mode	Hydraulic Drive

COMPONENTS	
Radiator	Radiator ZH1117x626x1357-S110Y120Z48Q/L03084
Slewing Reducer	Gearbox Assembly GS20D25J.0
Slewing Bearing	Slewing Bearing SSF1405.50CWHII
Central Rotary Joint	Central Rotating Connector Assembly SMHW40.8.2.1
Main Pump	Combined Pump Assembly K5V212DPH1N6R-0E81-V
Transmission	Transmission 360GB25627
Axle	Front Axle 19MREZH-X148AG
Axle	Rear Axle 19MREHH-X148AGB

*Operating weight is for the SMHW48G5 with no attachments, and standard stick.

SANY America Inc. reserves the right to change these specifications at any time without prior notification. ©2026 SANY America Inc. HEXPS26SMHW48G5001

MATERIAL HANDLER SMHW48G5

STANDARD FEATURES

ENGINE
- Cummins Engine QSL9 Stage 5
- Auto-idle & Auto-idle-shutdown
- Dual-element dry air filter
- Batteries 24V (2 – 12V)
- Coolant Expansion tank
- Electronic engine control
- Enclosed fan guard
- Engine coolant to –34 deg. F
- Fuel filter with water separator
- Full-flow oil filter
- Turbocharger with charge air cooler
- High flow hydraulically powered cooling fan
- 500-hour engine-oil-change interval
- 70% (35 deg.) off-level capability
- Engine air precleaner
- Severe-duty fuel filter

HYDRAULIC SYSTEM
- Spring-applied, hydraulically released automatic swing brake
- Auxiliary hydraulic-flow adjustments through monitor
- Control pattern change valve
- Auxiliary hydraulics with 1 and 2-way combination piping for high flow
- Auxiliary hydraulics with 2- way rotation piping and controls
- Auxiliary pilot and electric controls
- Quick coupler plumbing and control
- Boom Cylinder
- Motion Arm Explosion-proof Valve
- Hydraulic Control Valve / Multi-way Valve
- Arm Cylinder
- Blast-proof Gate Valves

UNDERCARRIAGE
- Front axle 19MREZH-X148AG
- Rear axle 19MREHH-X148AGB
- Planetary drive with axial piston motors
- Transmission 360GB25627
- Reducer GS20D25C-G1H1N
- Slewing bearing SSF1405.50CWHII
- Center rotation connector assembly SMHW40.8.2.1
- Propel motor shields
- 2-speed travel selection
- Undercarriage frame opening guard

BOOM & STICK
- Boom (Standard) 34' 5"
- Stick (Option 1) 24' 7"
- Stick (Option 2) 31' 2"

UPPERSTRUCTURE
- Right-hand, left-hand, and counterweight mirrors
- Vandal lock: Cab door /Service door/ Toolbox/Cab Filter
- Debris screen in side panel
- Remote-mounted engine oil and fuel filters
- Heavy duty triangle channel frame guard

ATTACHMENTS
- Convenient grease points
- Centralized lubrication system
- Oil-impregnated bushings
- Reinforced resin thrust plates

OPERATOR'S STATION
- Adjustable independent-control positions
- AM/FM radio with USB charging and Bluetooth® connectivity
- Auto climate control/air conditioner/heater/pressurizer
- Built-in Operator's Manual storage compartment and manual
- 12 and 24V outlets 60 watt 5 amp
- Deluxe heated air suspension cloth seat with adjustable armrests
- Heavy duty rubber floor mat
- Front windshield wiper with intermittent speeds
- Illuminated gauge: diesel exhaust fluid, engine coolant, and fuel levels
- Horn, electric
- Hour meter, electric
- Hydraulic shutoff lever, all controls
- Interior light
- Large cup holder
- Digital Power mode selection: 3 power modes
- Digital tool selection: bucket, shear, hammer, etc.
- 10" Touch screen LCD monitor
- Motion alarm with cancel switch (conforms to SAE J994)
- Auxiliary hydraulic control switches in right console lever
- 3" Orange retractable seat belt
- Transparent overhead hatch
- Heated or cooled food/beverage storage
- Hydraulic oil filter restriction indicator light
- Protection screens for cab front, rear, and side (optional)

ELECTRICAL
- 60-amp alternator
- Ground level electrical disconnect (lockout tag out)
- Blade-type multi-fused circuits
- Positive-terminal battery covers
- Rearview and blind-side camera

LIGHTS
- Bright LED worklight package

In the interest of continual equipment development, SANY America Inc. reserves the right to change these specifications at any time without prior notification.
©2026 SANY America Inc. HEXPS26SMHW48G5001

LIFTING PERFORMANCE

Standard 34' 5" Boom
Standard 24' 7" Stick
Standard 10' 3" Wheel Width
No Bucket

Ratings are based on ISO 10567:2007. Lift capacity does not exceed 75% of tipping load with the machine on firm, level ground or 87% of hydraulic lifting capacity.

LIFT CAPACITIES OF MATERIAL HANDLER

(Boom 34' 5", Stick 24' 7", Unit: Ton)

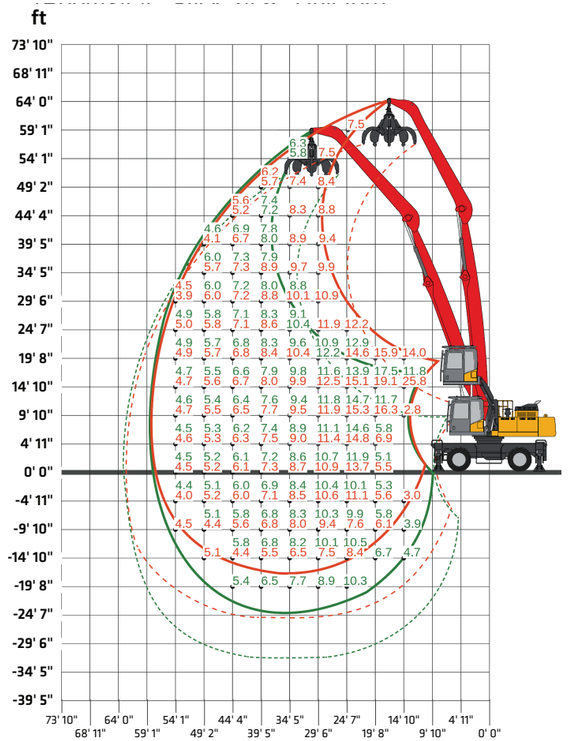

(Tip of Boom Path w/ Lower Full - Floating Axle Position)
(Grapple Path w/ Lower Full - Floating Axle Position)

(Tip of Boom Path w/ Upper Full - Floating Axle Position)
(Grapple Path w/ Upper Full - Floating Axle Position)

LIFT CAPACITIES OF MATERIAL HANDLER

(Boom 34' 5", Stick 31' 2", Unit: Ton)

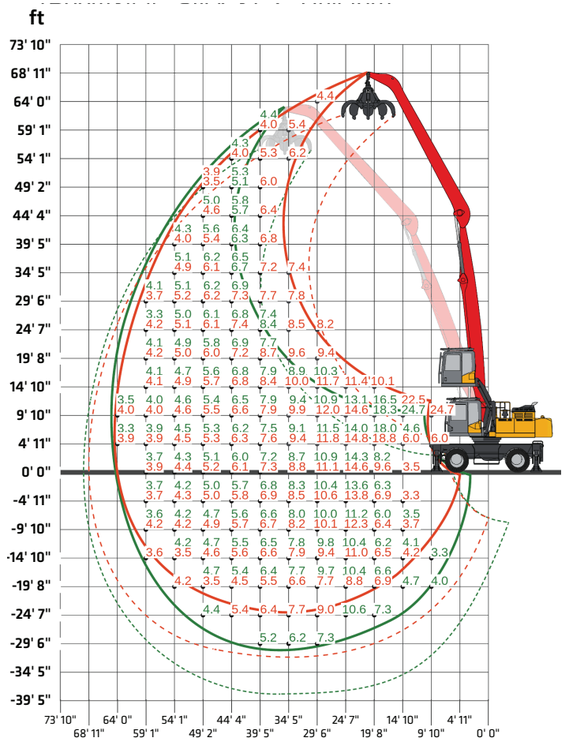

In the interest of continual equipment development, SANY America Inc. reserves the right to change these specifications at any time without prior notification.
©2026 SANY America Inc. HEXPS26SMHW48G5001

sanyamerica.com ||| SMHW48G5